Modeling Skin Effect With Reduced Decoupled R-L Circuits

S. Mei and Y. I. Ismail

Electrical and Computer Engineering
Northwestern University
2145 Sheridan Road
Evanston, Illinois 60208, USA

ABSTRACT

On-chip conductors such as clock and power distribution networks require accurately modeling skin effect. Furthermore, to incorporate skin effect in the existing generic simulation tools such as SPICE, simple frequency independent lumped-element circuit models are needed. A rule-based R-L circuit model is proposed in this paper that predicts the skin effect in the entire frequency range accurately. This circuit model only contains a few parallel branches of resistors and inductors. A maximum error in impedance values of less than 3% is achieved using only two or three constant element branches.

1. INTRODUCTION

Multiple metal layers are used for interconnect in high performance VLSI circuits, with thicker layers on the top. To maintain low clock skew and low electromigration, the clock and power distribution networks in the interconnect layers are made wide. With clock frequencies in the gigahertz range, it is necessary to use accurate skin effect models to capture the behavior of the clock and power distribution networks, especially the parts in the top layers.

Skin effect is a well-known physical phenomenon. Several models [1]-[3] aim at finding the values of inductance and resistance as functions of frequency. Although these models are accurate, they are difficult to use with most available simulators [4]. Several other models aim at finding frequency independent lumped-element circuits to replace the original frequency dependent elements. Among these models are the volume filament model [5], ladder model [6], and the compact circuit models [7]-[8]. All these models can be directly used in generic simulators such as SPICE. However, the volume filament model and the ladder model have large number of elements and are expensive in terms of computational time. The compact circuit model in [7] needs an iterative procedure to find the best circuit elements. Although the model in [8] gives accurate results for several important interconnect structures, its accuracy for a general interconnect wire is not demonstrated.

The method described here starts with the volume filament model and proceeds to produce a reduced realizable and decoupled R-L equivalent circuit. Since the self/mutual inductance matrix is positive semi-definite [11], all the eigenvalues are non-negative. It is very easy to group the branches of new resistances and inductances and to find the equivalent resistance and inductance of each group. Furthermore, only a few branches of the equivalent resistance and inductance are much smaller than the rest. That makes it feasible to accurately approximate the original wire by a few resistor and inductor branches in parallel.

The rest of the paper is organized as follows. The approach to obtain decoupled R-L branches via similarity transformation is explained in section 2. Section 3 explains the rule of reduction and compares the frequency dependent resistance and inductance calculated from the reduced R-L circuits and those from the volume filament model. Conclusions are given in section 4.

2. SKIN EFFECT MODEL

At DC, the current in a conductor is evenly distributed over the cross section. Skin effect occurs when alternating current flows through a conductor. The alternating current induces a time varying magnetic field, which in turn induces electrical field and causes an uneven distribution of current over the cross section of the conductor. The electrical current tends to crowd toward the surface of the conductor, leading to an increase in the resistance and a decrease in the internal inductance.

If the cross section of the conductor is divided into much smaller sections, then the current distribution in each filament can be regarded as uniform. The frequency dependent resistance and inductance can be obtained by solving the currents in the inductively coupled R-L branches, which is the main idea of the volume filament model.

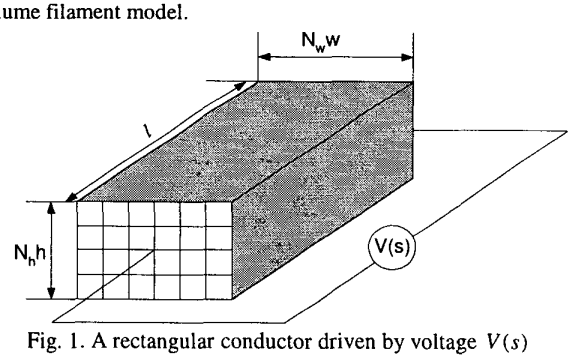

Fig. 1. A rectangular conductor driven by voltage $V(s)$

Fig. 1 shows a rectangular conducting wire driven by any voltage $V(s)$. To apply the volume filament model, the cross section is divided into $N_w \times N_h$ identical filaments with width w, height h, and length l for each filament. Assume N_w and N_h are large enough, so that the current density in each filament is essentially uniform. Denoting σ the conductivity of the wire, the resistance of each filament is given by

$$r = \frac{l}{\sigma w h} \tag{1}$$

The self-inductance for each filament is [9]

0-7803-7761-3/03/$17.00 ©2003 IEEE

$$L_{self} = 0.2l[\ln(\frac{2l}{w+h}) + 0.5 + 0.2235\frac{w+h}{l}]\mu H \qquad (2)$$

Denoting d_{ij} the distance between the center axes of the ith and the jth filaments ($i \neq j$), the mutual inductance between the two filaments is [10]

$$M_{ij} = 0.2l[\ln(\frac{l}{d_{ij}} + \sqrt{1+\frac{l^2}{d_{ij}^2}}) - \sqrt{1+\frac{d_{ij}^2}{l^2}} + \frac{d_{ij}}{l}]\mu H \qquad (3)$$

With these parameters, the conductor in Fig. 1 is equivalent to the circuit in Fig. 2 where $N = N_w N_h$.

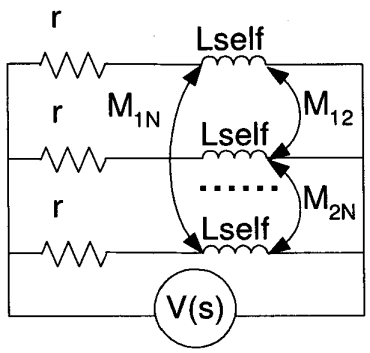

Fig. 2. Coupled R-L circuit

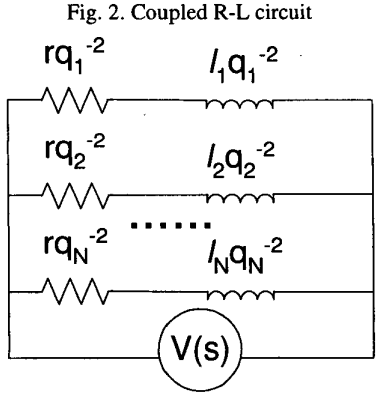

Fig. 3. Equivalent R-L circuit

To guarantee an almost even distribution of current in each filament, the dimension of the filament w and h are selected to be smaller than the skin depth at the highest frequency of interest. This criterion means large number of filaments, *e.g.*, 20, needed to replace wide conductors with significant skin effect. Non-uniform division of the conductor cross sectional area with fine division near the surface and coarse division away from the surface can reduce the total number of divisions. However, direct application of this volume filament model to simulate large interconnect circuits with significant skin effect is still formidable.

A more efficient way of using the volume filament model is to reduce the original coupled R-L circuit to a circuit of a few, *e.g.*, 3, *decoupled* R-L branches in parallel. The rest of this section and part of next section are dedicated to the explanation of a formal reduction technique to achieve this goal.

The voltage drop on any R-L branch in Fig. 2 is $V(s)$. According to Ohm's law, the voltage drop $V(s)$ equals the current in each R-L branch times the impedance of each branch, which in matrix form is given by

$$V(s)\begin{bmatrix}1\\1\\\vdots\\1\end{bmatrix} = r\begin{bmatrix}i_1\\i_2\\\vdots\\i_N\end{bmatrix} + s\begin{bmatrix}L_{self} & M_{12} & \cdots & M_{1N}\\M_{21} & L_{self} & \cdots & M_{2N}\\\vdots & \vdots & \vdots & \vdots\\M_{N1} & M_{N2} & \cdots & L_{self}\end{bmatrix}\begin{bmatrix}i_1\\i_2\\\vdots\\i_N\end{bmatrix} \qquad (4)$$

where i_1, i_2, $\cdots$, and i_N are the currents in each R-L branch. For simplicity, four symbols $\boldsymbol{V}$, $\boldsymbol{I}$, $\boldsymbol{L}$, and $\boldsymbol{R}$ are introduced to refer the voltage vector, current vector, and self/mutual inductance matrix in (4), and the product of the resistance r and an $N \times N$ identity matrix $\boldsymbol{I}_N$, respectively. In terms of $\boldsymbol{V}$, $\boldsymbol{I}$, $\boldsymbol{L}$, and $\boldsymbol{R}$, (4) can be rewritten as

$$\boldsymbol{V} = \boldsymbol{RI} + s\boldsymbol{LI} \qquad (5)$$

The symmetric matrix $\boldsymbol{L}$ is positive semi-definite, meaning that all the eigenvalues of $\boldsymbol{L}$ are non-negative real numbers. Because $\boldsymbol{L}$ is real and symmetrical, there always exist normal and orthogonal matrices to diagonalize it. Denote $\boldsymbol{Q}$ any normal orthogonal matrix and $\boldsymbol{L}_{Diag}$ the diagonal matrix, namely

$$\boldsymbol{L}_{Diag} = \boldsymbol{Q}^T\boldsymbol{LQ} = \begin{bmatrix}l_1 & 0 & \cdots & 0\\0 & l_2 & \cdots & 0\\\vdots & \vdots & \vdots & \vdots\\0 & 0 & \cdots & l_N\end{bmatrix} \qquad (6)$$

where l_1, l_2, $\cdots$, and l_N are non-negative real eigenvalues. Multiplying the matrix $\boldsymbol{Q}$ to the left of both sides of (5) and applying (6) and the normality and orthogonality property ($\boldsymbol{Q}^T\boldsymbol{Q} = \boldsymbol{QQ}^T = \boldsymbol{I}_N$) of the matrix $\boldsymbol{Q}$ yields

$$\boldsymbol{V}' = \boldsymbol{RI}' + s\boldsymbol{L}_{Diag}\boldsymbol{I}' \qquad (7)$$

where $\boldsymbol{V}' = \boldsymbol{Q}^T\boldsymbol{V}$ and $\boldsymbol{I}' = \boldsymbol{Q}^T\boldsymbol{I}$.

The original current vector $\boldsymbol{I}$ equals $\boldsymbol{QI}'$ or $\boldsymbol{Q}(\boldsymbol{R} + s\boldsymbol{L}_{Diag})^{-1}\boldsymbol{V}'$. The latter can be rewritten as $\boldsymbol{Q}(\boldsymbol{R} + s\boldsymbol{L}_{Diag})^{-1}\boldsymbol{Q}^T[1\ \ 1\ \ \cdots\ \ 1]^T V(s)$. Given the voltage $V(s)$, the total current in all R-L branches should be computed to obtain the total impedance of the R-L circuit in Fig. 2. Denote the total current as I_t that is

$$\begin{aligned} I_t &= [1\ \ 1\ \ \cdots\ \ 1]\boldsymbol{I} \\ &= [1\ \ 1\ \ \cdots\ \ 1]\,\boldsymbol{Q}(\boldsymbol{R} + s\boldsymbol{L}_{Diag})^{-1}\boldsymbol{Q}^T[1\ \ 1\ \ \cdots\ \ 1]^T V(s) \end{aligned} \qquad (8)$$

The product $[1\ \ 1\ \ \cdots\ \ 1]\boldsymbol{Q}$ and its transpose $\boldsymbol{Q}^T[1\ \ 1\ \ \cdots\ \ 1]^T$ are a row and a column vectors respectively. If the ith element of $[1\ \ 1\ \ \cdots\ \ 1]\boldsymbol{Q}$ or $\boldsymbol{Q}^T[1\ \ 1\ \ \cdots\ \ 1]^T$ is represented by the symbol q_i, and the ij^{th} element of $(\boldsymbol{R} + s\boldsymbol{L}_{Diag})^{-1}$ is represented by the symbol z_{ij}, then I_t can be re-expressed as

$$I_t = V(s)\sum_{i,j=1}^{N} q_i z_{ij} q_j \qquad (9)$$

Since matrix $(\boldsymbol{R} + s\boldsymbol{L}_{Diag})^{-1}$ is diagonal, among z_{ij}'s only z_{ii}'s are nonzero and equal to $1/(r + sl_i)$. So (9) further reduces to

$$I_t = V(s)\sum_{i=1}^{N} \frac{q_i^2}{r + sl_i} \qquad (10)$$

Equation (10) implies that the circuit in Fig. 2 can be replaced by N decoupled R-L branches with resistance and inductance equal to r/q_i^2 and l_i/q_i^2 respectively, as shown in Fig. 3.

3. THE RULES OF REDUCTION AND SIMULATED DATA

When skin effect is negligible, to guarantee accurate simulation result, the interconnect wires are divided into smaller sections along its length using π or T sections. When skin effect is prominent, this approach is still needed. The challenge in the latter case is that the resistance and inductance of each section are frequency dependent and their formulae or their equivalent reduced R-L circuits are difficult to find. Section 2 has explained how to find *decoupled* R-L circuits for the frequency dependent resistance and inductance. This section will present the rules to reduce the decoupled R-L circuit and demonstrate the accuracy of the reduced R-L circuits.

Consider three conductor sections all 1μm thick and 20μm long but 2μm, 5μm, and 10μm wide, respectively. Assume that the highest frequency of interest is 30GHz and the conductivity takes the value 3.5×10^7 S/m. According to the skin depth formula $\delta = \sqrt{1/(\pi\mu\sigma f)}$, the skin depth at 30GHz is 0.49μm. To make the volume filament model accurate, the cross section of each conductor is divided into filaments of 0.25μm×0.25μm.

The new resistance r/q_i^2 and new inductance l_i/q_i^2 ($i = 1,\cdots,N$) are calculated for each filament. These branches are grouped such that the branches in any group are within one order of magnitude from each other. The elements in each group can be combined to get a branch with the new resistance equal to the total parallel resistance and the new inductance equal to the total parallel inductance. The logic behind this reduction is that the resistance of the branch matches the low frequency impedance of the group while the inductance of the branch matches the impedance of the group at high frequency. In the intermediate frequency range, the impedance of the branch more or less matches the impedance of the group. To further reduce the size of the R-L circuit, the conductance of each R-L branch at 30GHz is calculated and those R-L branches whose conductance contribute a little to the overall conductance, *e.g.*, less than 1%, are removed from the R-L circuit.

Table 1 shows the resistance and inductance in the reduced R-L circuits. It should be pointed out that the rules above result in only two significant R-L branches in the frequency of interest for the 2μm wire and three significant R-L branches for the 5 and 10μm wires. Table 2 lists the maximum error in the resistance and inductance in the frequency of interest (up to 30GHz) obtained from the volume filament model and the reduced R-L model. As shown in Table 2, two branches give sufficient accuracy for the 2μm wire up to the frequency of interest (30GHz). However, three branches are required for the 5 and 10μm wires for an error of less than 2.2%.

Table 1. Resistance and inductance values in the reduced R-L circuits

Conductors of 1μm thick and 20 μm long				
# of R-L branches	Element	Conductor Width (μm)		
		2	5	10
2	Resistance (Ω)	$r_1 = 108.12$ $r_2 = 0.287$	$r_1 = 17.92$ $r_2 = 0.115$	$r_1 = 3.875$ $r_2 = 0.058$
	Inductance (pH)	$l_1 = 187$ $l_2 = 12.4$	$l_1 = 124.7$ $l_2 = 9.7$	$l_1 = 60$ $l_2 = 7.3$
3	Resistance (Ω)	Not needed	$r_1 = 375.76$ $r_2 = 18.82$ $r_3 = 0.115$	$r_1 = 60.41$ $r_2 = 4.141$ $r_3 = 0.058$
	Inductance (pH)		$l_1 = 506$ $l_2 = 165$ $l_3 = 9.7$	$l_1 = 187$ $l_2 = 88.5$ $l_3 = 7.3$

Table 2. Accuracy of the reduced R-L circuits as compared to the volume filament model

Conductors of 1μm thick and 20 μm long			
Conductor Width (μm)	# of R-L branches	Error boundary	
		Resistance	Inductance
2	2	0.0%	0.0%
5	2	4.3%	7.5%
	3	1.9%	1.9%
10	2	6.6%	20.7%
	3	2.2%	0.1%

The simulation reveals that the larger the cross section dimension of a wire, the more number of R-L branches needed to capture skin effect. This can be explained intuitively by recalling the skin depth formula $\delta = \sqrt{1/(\pi\mu\sigma f)}$. Apparently, resistances of wider and thicker conductors start to deviate from their DC values at lower frequency and increase with frequency. However, resistances of reduced R-L circuits tend to saturate at high frequency, meaning that the R-L branches that accurately capture skin effect impedance at low frequency are not accurate at high frequency. More R-L branches are needed to improve the accuracy at high frequency. This trend means more R-L sections needed for conductors of bigger cross section dimensions.

Fig. 4 to Fig. 6 compare the impedance calculated from the volume filament model and that from the reduced R-L circuits for the 2μm, 5μm, and 10μm conductors, respectively. As can be seen, the error boundaries, or the maximum errors in Table 2 only exist in a small portion of the whole frequency range. Hence, replacing the original conductors with the reduced R-L circuits will cause much less error in propagation delay, power consumption, and so on.

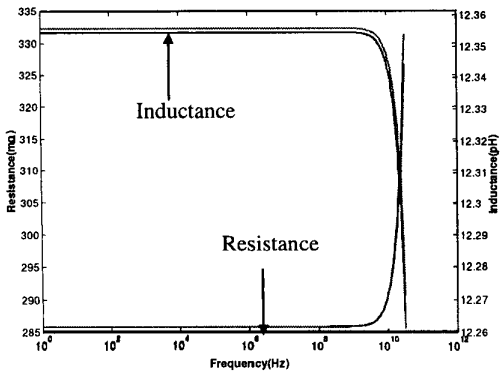

Fig. 4. Resistance and inductance calculated from the volume filament model and the two branches R-L circuit for the 2μm wide conductor.

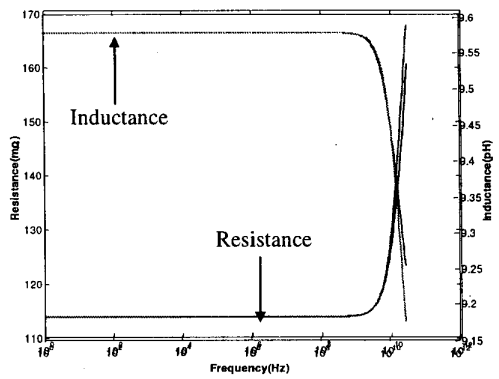

Fig. 5. Resistance and inductance calculated from the volume filament model and the two branches R-L circuit for the 5μm conductor.

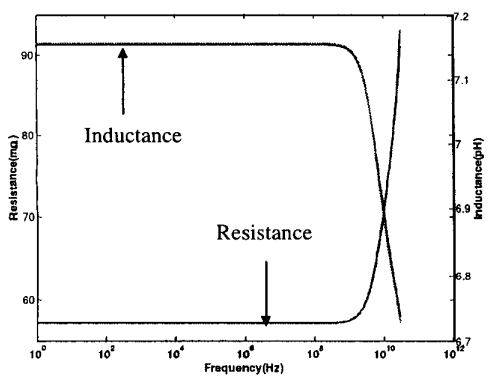

Fig. 6 Resistance and inductance calculated from the volume filament model and the three branches R-L circuit for the 10μm conductor.

4. CONCLUSIONS

A reduced R-L circuit model is developed which accurately captures skin effect. Given a conductor's dimensions, the resistance and inductance of the reduced R-L circuit can be calculated based on the rule explained in this paper. The resulting circuit model only contains a few parallel branches of resistors and inductors. A maximum error in impedance values of less than 3% is achieved using only two or three constant element branches.

Chip level interconnect circuits consist of large number of wire segments with prominent skin effect. Direct application of volume filament model will render state space dimension much larger, e.g., 10 times, than application of the reduced R-L circuits. The major overhead of obtaining reduced R-L circuit is the computation time in orthogonalizing small matrices, e.g, 20×20 matrices. Consequently, computational time saved due to the reduction in matrices dimensions is much more than the total overhead of obtaining reduced R-L circuits, which makes the reduced R-L circuit model very efficient for chip level interconnect circuits simulation.

5. REFERENCES

[1] K. M. Coperich and A. E. Ruehli, "Enhanced skin effect for partial-element equivalent-circuit (PEEC) models," *IEEE Transactions on Microwave Theory and Techniques*, vol. 48, pages 1435-1442, 2000.

[2] M. Xu and L. He, "An efficient model for frequency-dependent on-chip inductance," *Proceedings of the 2001 conference on Great Lakes symposium on VLSI*, pages 115-120, 2001.

[3] M. J. Tsuk and A. J. Kong, "A hybrid method for the calculation of the resistance and inductance of transmission lines with arbitrary cross sections," *IEEE Transactions on Microwave Theory and Techniques*, vol. 39, pages 1338-1347, 1991.

[4] L. T. Pillage and R. A. Rohrer, "Asymptotic waveform evaluation for timing analysis," *IEEE Trans. Computer-Aided Design*, vol. 9, pages 352-366, 1990.

[5] P. Silvester, "Modal network theory of skin effect in flat conductors," *Proceedings of the IEEE*, vol. 54, pages 1147-1151, 1966.

[6] H. A. Wheeler "Formulas for the skin effect". *Proceeding of the institute of radio engineers*, vol. 30, pages 412-424, 1942.

[7] S. Kim and D. P. Neikirk, "Compact equivalent circuit model for the skin effect," *1996 IEEE-MTT-S International Microwave Symposium*, San Francisco, June 1996.

[8] B. Krauter and S. Mehrotra, "Layout based frequency dependent inductance and resistance extraction for on-chip interconnect timing analysis," *Proceedings of the 35th annual conference on design automation*, pages 303-308, 1998.

[9] B. E. Keiser, Principles of Electromagnetic Compatibility, Artech House Inc., Dedaham, Massachusetts, page 102, 1979.

[10] E. B. Rosa "The self and mutual inductance of linear conductors". *Bulletin of the National Bureau of Standards*, vol. 4, pages 301-344, 1908.

[11] M. Kamon, N. Marques, L. M. Silveira, and J. White, "Generating reduced order models via PEEC for capturing skin and proximity effects," in *Electrical Performance of Electronic Packaging* West Point, NY, pages 259-262, 1998.